Tora 4 × 4 m

Dimensions for preparing the base and checking the available space.

GENERAL ARRANGEMENT

Closed roof shown

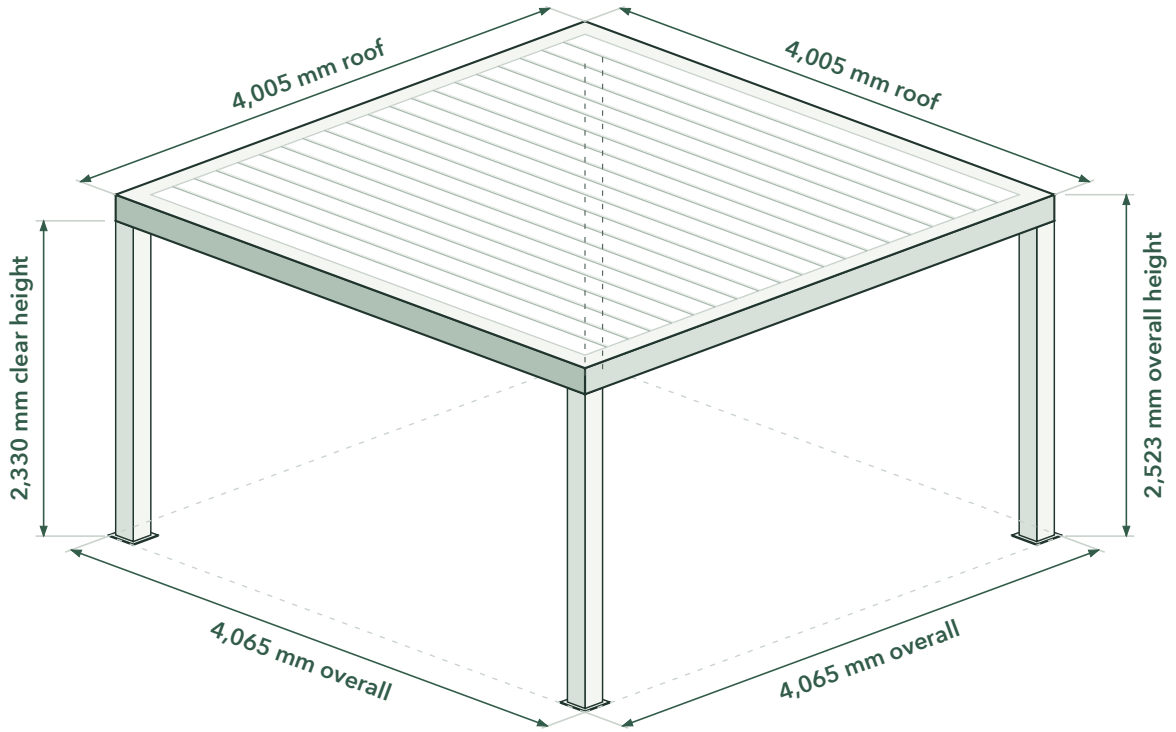

Dimensions at a glance

All dimensions in millimetres

Overall footprint **4,065 × 4,065 mm**	Clear between posts **3,705 × 3,705 mm**
Roof dimensions **4,005 × 4,005 mm**	Both inner-corner diagonals **5,239.7 mm**
Clear height below frame **2,330 mm**	Overall height - roof closed **2,523 mm**
Overall height - open at 132° **2,572.5 mm**	Maximum during opening - at 48° **2,596.4 mm**

Open heights are calculated from the 2,523 mm frame height plus the louvre projection.
Clear height includes base plate thickness. Drawings are schematic and not to scale.

Set-out & roof clearance

Check the four foot positions and the highest point through the roof movement.

GROUND PLAN

Roof omitted for clarity

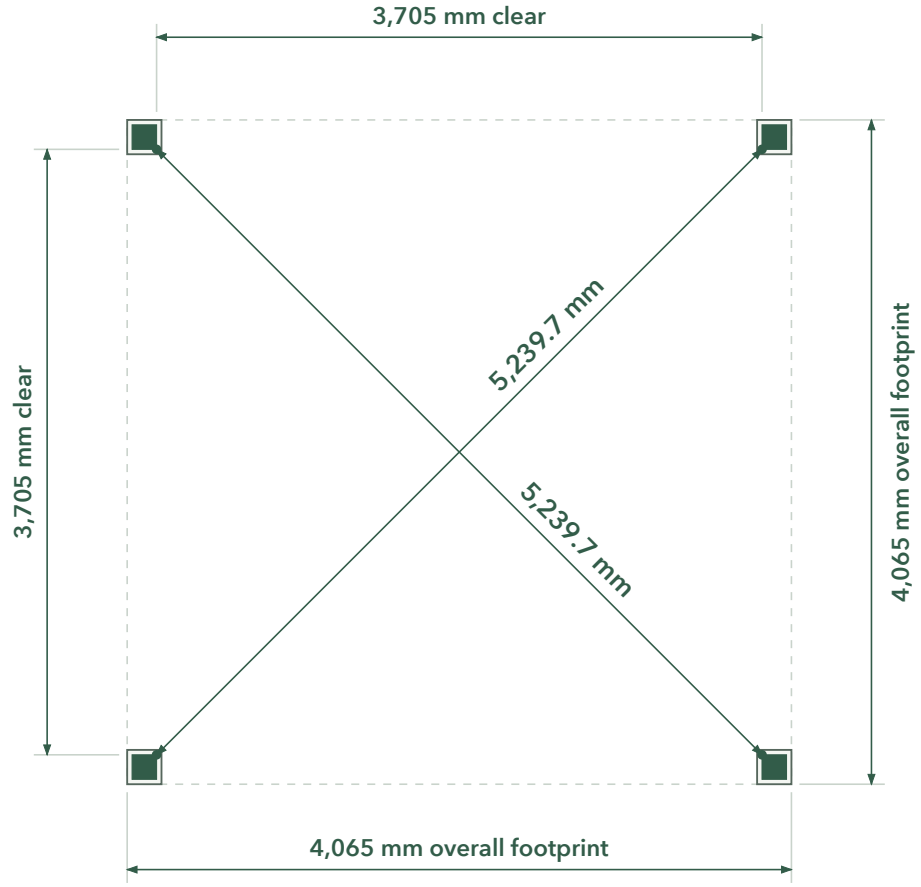

150 × 150 mm post

Overall footplate envelope

Measure both diagonals between the marked inner post corners. Both must match.

Louvre positions

Frame datum: 2,523 mm above the base

CLOSED

Roof closed

2,523 mm

overall height

MAXIMUM HEIGHT

Louvres at 48°

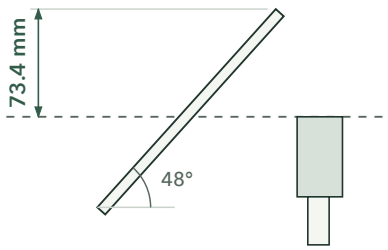

2,596.4 mm

overall height (calculated)

FULLY OPEN AT 132°

Louvres at 132°

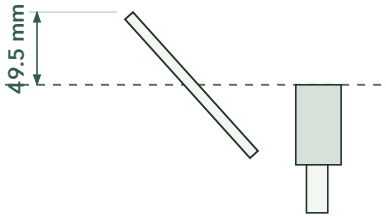

2,572.5 mm

overall height (calculated)

Check overhead space against the maximum 2,596.4 mm height during opening.

Prepare the base

A flat, stable surface with solid support beneath every foot.

PAVED / CONCRETE BASE

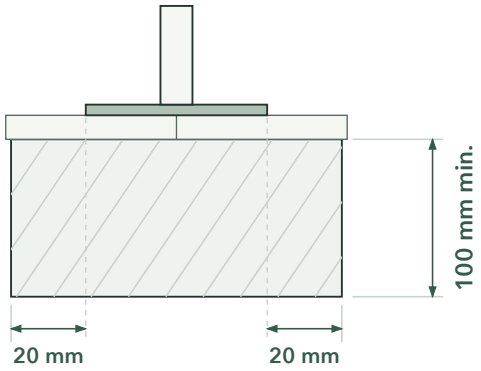

Solid concrete

Extend 20 mm beyond each side of the footplate.
Compacted hardcore alone is insufficient.

DECKING BASE

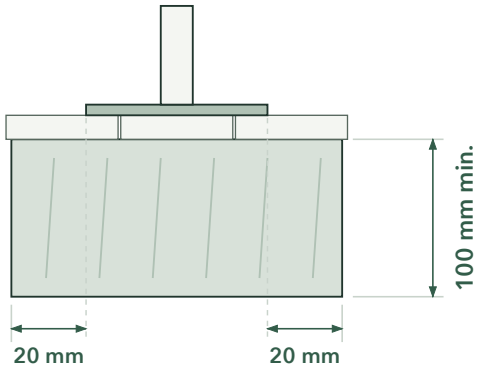

Solid timber joist

Extend 20 mm beyond each side of the footplate.
Fix into joists; deck boards alone are insufficient.

Surface checks

Level and slope	Prepare a flat base with a maximum slope of 10 mm in one direction.
Stone flags	Check for sinking or twisting. Lay new flags level on a solid cement bed at each foot.
Porcelain tiles	Tell LuxSol before installation. Diamond drilling is required and carries an extra fitting charge.

Before installation

- ✓ Leave working room around all four feet.
- ✓ Check the full louvre movement beneath eaves, branches and lights.
- ✓ Confirm actual fixing positions against the pergola before drilling.
- ✓ Arrange the electrical supply with a qualified electrician.

Support sections are schematic. Use this guide with the supplied installation manual.